BUREAU OF LAND MANAGEMENT
43 CFR PART 3160
Federal Register / Vol. 54, No. 36, Friday, February 24, 1989 / Rules and Regulations
Effective date: March 27, 1989.

Onshore Oil and Gas Operations; Federal and Indian Oil and Gas Leases; Onshore Oil and Gas Order No. 3, Site Security

Site Security
I. Introduction.
  A. Authority.
  B. Purpose.
  C. Scope.
II. Definition.
III. Requirements.
  A. Storage and Sales Facilities - Seals.
  B. Lease Automatic Custody Transfer (LACT) System - Seals.
  C. Removal of Crude Oil from Storage Facilities by Means Other than through a LACT Unit.
  D. By - Pass Around Meters.
  E. Theft or Mishandling of Oil.
  F. Self Inspection.
  G. Recordkeeping.
  H. Site Security Plan.
  I. Site Facility Diagram.
IV. Variances from Minimum Standards.

Attachments.
I. Diagrams.

Onshore Oil and Gas Order No. 3, Site Security

I. Introduction

A. Authority

This Order is established pursuant to the authority granted to the Secretary of the Interior pursuant to various Federal and Indian mineral leasing statutes and the Federal Oil and Gas Royalty Management Act of 1982. This authority has been delegated to the Bureau of Land Management and is implemented by the onshore oil and gas operating regulations contained in 43 CFR Part 3160. Section 3164.1 thereof specifically authorizes the Director, Bureau of Land Management, to issue Onshore Oil and Gas Orders when necessary to implement and supplement the operating regulations and provides that all such Orders shall be binding on the operators of Federal and restricted Indian oil and gas leases which have been, or may hereafter

be, issued.

Specific authority for the provisions contained in this order is found at:

§3162.4-1, Well records and reports;

§3162.7-1, Disposition of Production;

§3162.7-5, Site Security on Federal and Indian (except Osage) Oil and Gas Leases; and subpart 3163, Noncompliance and Assessments.

B. Purpose

The purpose of this Order is to implement and supplement the regulations in 43 CFR 3162.7-1 and 3162.7-5. This Order establishes the minimum standards for site security by providing a system for production accountability and covers the use of seals, by-passes around meters, self inspection, transporters' documentation, reporting of incidents of unauthorized removal or mishandling of oil and condensate, facility diagrams, recordkeeping, and site security plans.

The Order identifies certain specific acts of noncompliance, rates them as to severity, establishes abatement periods for corrective action for such acts of noncompliance, and provides for variances. This Order serves as notice to any party cited for noncompliance that it may request from the authorized officer an extension of the abatement period for any violation, provided the request for extension is applied for and granted prior to the expiration of the abatement period previously allowed. Additionally, this Order serves as notice to any party aggrieved by an enforcement action taken pursuant to this Order, of that party's rights, pursuant to 43 CFR 3165.3, to administrative review, hearing on the record, and judicial review.

C. Scope

This Order is applicable to all Federal and Indian (except Osage) oil and gas leases. In addition, this Order is applicable to all wells and facilities on State or privately-owned mineral lands committed to a unit or communitization agreement that affects Federal or Indian interests, notwithstanding any provision of a unit or communitization agreement to the contrary.

II. Definitions

The following definitions apply for the purposes of this Order.

A. Access means the ability to enter into any tankage or piping system through a valve, valves or combination of valves and/or tankage which would permit the removal of oil; or to enter any component in a measuring system affecting the quality and/or quantity of the liquid being measured, without documentation as provided by this Order.

B. Appropriate Valves means those valves in a particular piping system that could provide unauthorized or undocumented access to stored or produced oil, i.e., fill lines, equalizer or overflow lines, sales lines, circulating lines, and drain lines that shall be sealed during a given operation.

C. Authorized Officer means any employee of the Bureau of Land Management authorized to perform the duties in Groups 3000 and 3100 of this title [43 CFR 3000.0-5(e)].

D. Authorized Representative means any entity or individual authorized by the Secretary to perform duties by cooperative agreement, delegation. or contract (See 43 CFR 3160.0-5).

E. Business Day means any day Monday through Friday excluding Federal holidays.

F. By-pass means any piping arrangement connected upstream and downstream of a meter which allows oil or gas to continue on the sales line without passing through the meter. Equipment which permits the changing of the orifice plate without bleeding the pressure off the gas meter run shall not be considered a by-pass.

G. Condensate means those natural gas liquids recovered in lease separators, dehydrators, or other production equipment and remaining in a liquid state at atmospheric pressure and temperature, consisting primarily of pentanes and heavier hydrocarbons.

H. Effectively Sealed means the placement of a seal in such a manner that the position of the sealed valve may not be altered, or a component in a measuring system affecting quality or quantity be accessed, without the seal being destroyed.

I. Facility means a site used to handle production and store oil and/or condensate produced from or allocated to Federal and Indian lands.

J. Gas is defined at 43 CFR 3000.0-5(a) to mean any fluid. either combustible or noncombustible, which is produced in a natural state from the earth and which maintains a gaseous or rarefied state at ordinary temperatures and pressure conditions.

K. Lease means any contract, profitshare arrangement, joint venture, or other agreement issued or approved by the United States under a mineral leasing law that authorizes exploration for, extraction of, or removal of oil or gas (See 43 CFR 3160.0-5)

L. Lessee means a person or entity holding record title in a lease issued by the United States (43 CFR 3100.0-5 and 3160.0-5).

M. Major Violation means noncompliance which causes or threaten immediate, substantial, and adverse impacts on public health and safety, the environment. production accountability, or royalty income.

N. Minor Violation means noncompliance which does not rise to the level of a "major violation."

O. Mishandling means unmeasured or unaccounted-for removal of production from a facility other than through theft.

P. Oil means all nongaseous hydrocarbon substances, other than those substances leasable as coal. oil shale or "gilsonite" (including all veintype solid hydrocarbons). However, condensate is excluded for the purposes of III.1.e.iv., of this Order. (See 43 CFR 3000.0-5.)

P.1. Bad Oil means crude oil that is not marketable to normal purchasers but that can be treated economically to be marketable by use of heat chemicals. or other methods or combination of methods with existing or modified lease facilities or portable equipment.

P.2. Clean Oil/Pipeline Oil means crude oil or condensate that is of such quality that it is acceptable to normal purchasers.

P.3. Slop Oil means crude oil that is of such quality that is not acceptable to normal purchasers and which requires special treatment other than that which can economically be provided with existing or modified facilities or portable equipment and is usually sold to oil reclaimers.

P.4. Waste Oil means lease crude oil that has been determined by the authorized officer to be of such quality that it cannot be treated economically and put in a marketable

condition with existing or modified lease facilities or portable equipment and cannot be sold to reclaimers and also has been determined by the authorized officer to have no economic value.

Q. Operator means any person or entity, including but not limited to the lessee or operating rights owner, who has stated in writing to the authorized officer that it is responsible under the terms and conditions of the lease for the operations conducted on the leased lands or a portion thereof (See 43 CFR 3160.0-5).

R. Piping means all tubular goods made of any material (e.g., metallic, plastic, fiberglass, and/or rubber).

S. Production Phase means that period of time or mode of operating during which crude oil is delivered directly to or through production vessels to the storage facilities and includes all operations at the facility other than those defined by the sales phase.

T. Sales Phase means that period of time or mode of operation during which crude oil is removed from the storage facilities for sale, transportation. or other purposes.

U. Seal means a device uniquely numbered which completely secures either a valve or those components of a measuring system that affect the quality and/or quantity of the liquid being measured.

III. Requirements

A. Storage and Sales Facilities – Seals

1. Minimum Standards.

a. The primary purpose for use of seals is to provide a means of documenting the removal of production for royalty purposes. Additionally, seals provide a means of detecting unauthorized entry to, and removal of, production. The seal requirements are based on American Petroleum Institute (API) recommended practice No. 12 R1, 3rd Edition, dated May 31, 1986, entitled "API Recommended Practice for Setting, Connecting, Maintenance, and Operation of Lease Tanks".

b. All lines entering or leaving all oil storage tanks shall have valves capable of being effectively sealed during the production and sales operations unless otherwise provided under the provisions of this Order. During the production phase, all valves that provide access to production shall be effectively sealed in the closed position. During the sales phase, and prior to taking the top gauge, all valves that would allow unmeasured production to enter or leave the sales tank shall be effectively sealed in the closed position. Any equipment needed for effective sealing, excluding the seals, shall be located at the site. If the sealing equipment is in the possession of the operator's representative or at a centralized field location, it shall be considered to be at the site. (See Attachment I). Each ineffectively sealed valve or appropriate valve not sealed shall be considered a separate violation.

c. Additionally, valves or combinations of valves and tankage that provide access to the production prior to measurement for sales or lease use purposes are considered appropriate valves and are subject to the seal requirements of this Order (See Attachment I).

d. Valves on any tank which contains oil or is connected to the production equipment are considered appropriate valves and are subject to the seal requirements contained in this

Order. except those valves on tanks which contain oil that has been determined by the authorized officer to be waste oil or valves on tanks used for the primary treatment of lease production (See Attachment I).

e. Exclusions to seal requirements contained in this Order shall be limited to the following:

i. Valves on production vessels and tanks used as production vessels (e.g., gunbarrel, wash tanks, etc.);

ii. Valves on water tanks, provided the possibility of access does not exist through a common circulating, drain, or equalizer system to production in the sales and storage tanks;

iii. Sample cock valves utilizing piping of 1 inch of less in diameter;

iv. When a single tank is used for collecting small volumes of condensate produced from a gas well, the requirement Is waived for requiring the fill line valve to be sealed during shipment, but all other seal requirements of this Order shall apply;

v. Gas line valves of 1 inch or less used as tank bottom "roll" lines need not be sealed; provided there is no access to the contents of the storage tank and said lines cannot be used as equalizer lines;

vi. Tank heating systems which use a of fluid other than the contents of the storage tank, i.e., steam, water, glycol;

vii. Valves, connected directly to the pump body, used on pump bleed off lines of 1 inch or less in diameter; and

viii. Tank vent line valves.

f. For systems where production may only be removed through the lease automatic custody transfer (LACT) system, no sales or equalizer lines need to be sealed. However, any valves which allow access for the removal of oil prior to its measurement through the LACT shall be effectively sealed (See Attachment I).

g. For oil measured and sold by tank gauging, all appropriate valves shall be sealed during the production phase, and all valves that provide access to production shall be effectively sealed in a closed position. During the sales phase, and prior to taking the top gauge, all valves that would allow unmeasured production to enter or leave the sales tank shall be effectively sealed in the closed position. Circulating lines having valves which may allow access for the removal from storage and sales facilities to any other source except through the treating equipment back to storage facilities shall be effectively sealed as near the storage facility as possible (See Attachment I).

2. Enforcement Provisions.

a. The following appropriate valves shall be effectively sealed during the production and sales phases or combination of production and sales phases:

- Sales valves*
- Circulating valves
- Drain valves
- Fill valve
- Equalizer valve

Violation:	Minor (unless marked by an asterisk or otherwise meeting the criteria of a major violation)
Corrective Action:	Seal as required.
Normal Abatement Period.	2 business days.

*Violation: Major	
Corrective Action:	Seal as required.
Normal Abatement period.	24 hours.

b. Devices used in conjunction with seals for effective sealing, excluding the seals, shall be located at the site. If the sealing equipment is in the possession of the operator's representative or at a centralized administrative location, it shall be considered to be at the site. The absence of each required sealing device shall be considered a separate violation. The classification of degree of violation, corrective action, and normal abatement period shall be the same as contained in a., above.

B. Lease Automatic Custody Transfer (LACT) Systems – Seals

This portion of the Order is predicated on the minimum requirements for the components to be used in a LACT system contained in Onshore Oil and Gas Order No. 4, LACT Components and General Operating Requirements; API Manual of Petroleum Measurement Standards, Chapter 6.1, 1st Edition, 1981, or the latest revised standard; and API Spec 11N, 2nd Edition, March 1979, entitled "Lease Automatic Custody Transfer (LACT) Equipment."

1. Minimum Standards.

Each LACT unit shall employ meters that have non-resettable totalizers and there shall be no by-pass around the LACT unit. The seal requirements apply to the components used for volume or quality determination of the oil being shipped. Each missing or ineffective seal shall be considered a separate violation. During normal operations the following components shall be effectively sealed:

- sample probe
- sampler volume control
- All valves on lines entering or leaving the sample container excluding the safety pop-off valve (if so equipped). Each valve shall be sealed in the open or closed position, as appropriate.
- Meter assembly, including the counter head, meter head and, if so equipped, automatic temperature compensator (ATC) automatic temperature and gravity selection service(ATG)
- Temperature recorder (if so equipped)
- Back pressure valve downstream of the meter
- Any drain valves in the system
- Manual sampling valves (if so equipped).

Violation:	Major.
Corrective Action:	Seal as required.
Normal Abatement Period:	24 hours.

– Absence of non-resettable totalizer.

Violation:	Major.
Corrective Action:	Install a meter head that utilizes a non-resettable totalizer.
Normal Abatement Period:	Install prior to sales or removal of production through the meter.

C. Removal of Crude Oil From Storage Facilities by Means Other Than Through a LACT Unit

The determination of the volume and quality of crude oil removed and sold from a storage facility shall be made by the operator in accordance with the accepted procedures for the measurement of oil (See Onshore Oil and Gas Order No. 4, Part III.C., Oil Measurement by Tank Gauging).
[54 FR 39529, Sept. 27, 1989]

1. Minimum Standards.

a. The operator shall require the transporter/purchaser to record on a run ticket prior to sales or removal of any crude oil from the lease, as a minimum, the following:

- Name of the seller
- Federal or Indian lease number(s), or as appropriate. the communitization agreement number or the unit agreement name and number and participating area identification'
- The location of the tank by quarter section. section, township and range (public land surveys) or by the legal land description
- A unique number, the date, and the tank number and capacity
- Opening gauge and temperature*
- Name of gauger and operator representative. if present at time of sale
- Number of the seal removed*.

Violation:	Minor (all items unless marked by asterisk).
Corrective Action:	Complete missing information.
Normal Abatement Period:	Upon request or within 3 business days of notice.

*Violation:	Major.
Corrective Action:	Submit completed run ticket
Normal Abatement Period.	Upon request or 3 business days.

b. The operator shall require that the run ticket be completed upon the completion of the sales or removal of oil from the lease to show the following:

- Closing gauge (second gauge) and temperatures*
- Observed gravity* and sediment and water (S&W) content*
- Number of the seal installed
- Signature of the gauger
- Signature of the operator representative (within 2 business days after the sales or removal).

Violation:	Minor (all items unless marked by asterisk).
Corrective Action:	Complete missing information.
Normal Abatement Period:	Upon request or within 3 business days of notice.

*Violation:	Major.
Corrective Action:	Submit completed run ticket
Normal Abatement Period:	Upon request or 3 business days.

c. When a single truck load constitutes a completed sale, the driver shall have in his/her possession documentation containing the information required in a. and b., above, during the period of shipment. When multiple truckloads are involved in a sale and the purchase is predicated on the difference between the opening and closing gauges (implying that the purchaser has purchased the entire tank), only the driver of the last truck is required to have the documentation containing the information required in a. and b., above, and all of the other drivers shall have in their possession appropriate documentation in the form of a trip log or manifest. All valves on lines entering or leaving the sales tank(s) shall be effectively sealed. except the sales and vent line valves, between truck loads, but the sales valve shall be sealed at the time the sale is completed. In the event documentation of a sale arrangement prevents having all the information required, the operator may apply for a variance in accordance with Part V. "Variances from minimum standards" . Once the seals have been broken, the purchaser shall be responsible for the entire contents of the tank until resealed.

Violation:	Major.
Corrective Action:	Discontinue trucking operation until documentation is provided.
Normal Abatement Period:	Prior to leaving the facility.

[54 FR 39529, Sept. 27, 1989]

D. By-Pass Around Meters

1. Minimum Standard.

There shall be no by-pass around gas meters or LACT unit meters.

Violation:	Major.
Corrective Action:	Remove by-pass.
Normal Abatement Action:	Immediate correction required.

E. Theft or Mishandling of Oil

1. Minimum Standard.

a. The operator shall, not later than the next business day after discovery of an incident of apparent theft or mishandling of crude oil and/or condensate, report such incident to the authorized officer. All oral reports shall be followed up with a written report within 10 business days. The incident report shall supply the following:

- Company name and name of individual reporting the incident(s)

- Lease number, communitization agreement number, or unit agreement name and number and participating area, as appropriate
- Location of facility where the incident occurred by quarter, quarter section, section, township, and range or legal land description
- The estimated volume of oil or condensate removed
- The way access was obtained to the production or how the mishandling occurred
- The individual who discovered the incident
- Date and time of the discovery of the incident
- Whether the incident was or was not reported to local law enforcement agencies and company security.

Violation:	Minor (failure to file a complete report).
Corrective Action:	Submit complete report of incident.
Normal Abatement Period:	Oral report upon request and complete written report within 10 business days after notice of failure to file a complete report.

*Violation:	Major (failure to report incident).
Corrective Action:	Submit report of incident.
Normal Abatement Period:	Oral report upon request and written report within 10 business days after notice of failure to report incident.

F. Self Inspection

I. Minimum Standard.

Operators/Lessees shall establish an inspection program for all leases for the purpose of periodically measuring production volumes and assuring that there is compliance with the minimum site security requirements. The program shall include a record of such inspections showing the findings of the inspection and a record of the volume measurements.

Violation:	Minor.
Corrective Action:	Institute an inspection program that includes a record of such inspections and establishes a measurement schedule.
Normal Abatement Period:	20 business days after notice.

[54 FR 39529, Sept. 27, 1989]

G. Recordkeeping

1. Minimum Standard.

The operator shall establish and maintain for a minimum of 6 years a recordkeeping system which shall be readily available to the authorized officer or authorized representative upon request and which includes all of the following as a minimum:

- Documentation of the number of each seal and the valve on which the seal is used, the date of installation or removal of the seal(s) for each storage tank. including the reason for the removal or installation of each such seal

- Documentation of each seal used on the LACT unit showing the component sealed and the date the seal was installed and removed including the reasons(s) for such removal

Violation:	Major
Corrective Action:	Commence and maintain documentation.
Normal Abatement Period:	1 business day after notice.

H. Site Security Plan

1. Minimum Standard.

The operator shall establish a site security plan for all facilities. The plan need not be submitted to the authorized officer, but the authorized officer shall be notified of the location where the plan is maintained and the normal working hours of said location. The plan shall be available to the authorized officer upon request. The plan shall include, but is not limited to the following:

- A self inspection program that monitors production volumes and ensures compliance with all seal requirements at each storage and sale facility and each LACT unit, if applicable (See Section III F hereof)
- A system to ensure the maintenance of accurate seal records and the completion of accurate run tickets (See Section III A, B, and C hereof)
- A system to ensure the reporting of incidents of apparent theft or mishandling of oil (See Section III E hereof)
- A system to ensure that there are no by-pass of meters (See Section III D hereof)
- A list of the leases, communitization agreements, unit agreements, and specific facilities that are subject to each plan
- Documentation that the authorized officer has been notified of the completion of a plan and site facility diagram(s) and the leases. communication agreements. unit agreements, and specific facilities that are subject to each plan and diagram(s)
- Documentation that the authorized officer was notified within 60 days of completion of construction of a new facility or of commencement of first production or of inclusion of the production from a committed nonFederal well into a federally supervised unit or communitization agreement. whichever occurs first, whether that facility is covered by a specific existing plan or a new plan has been prepared.

Violation:	Minor.
Corrective Action:	Comply with requirements.
Normal Abatement Period:	20 business days after notice.

[54 FR 39529, Sept. 27, 1989]

I. Site Facility Diagram

1. Minimum Standard.

A facility diagram is required for all facilities, including those facilities not located on Federal or Indian lands but which are subject to Federal supervision through commitment to

a federally approved unit agreement or communitization agreement. This requirement is not applicable to dry gas production facilities where no liquids are produced or stored. No format is prescribed for facility diagrams. However, the facility diagram should be prepared on 8½ x 11 paper, if possible, and should be legible and comprehensible to an individual with an ordinary working knowledge of oil field operations (See Attachment I). The facility diagram shall:

- Accurately reflect the relative position of the production equipment, piping, and metering systems in relationship to each other, but need not be to scale
- Commencing with the header, identify the vessels, piping, and metering systems located on the site and shall include the appropriate valves and any other equipment used in the handling, conditioning, and disposal of oil. gas, and water produced, including any water disposal pits or emergency pits. In those instances where pits are co-located, such pits may be shown in parentheses on the facility diagram
- Indicate which valve(s) shall be sealed and in what position during the production and sales phases and during the conduct of other production activities, i.e., circulating tanks, drawing off water, which may be shown by an attachment, if necessary
- Require as an addition. when describing co-located facilities operated by 2 different operators, a skeleton diagram of the co-located facility, showing only equipment. For co-located common storage facilities operated by 1 operator, one facility diagram shall be sufficient
- Be filed within 60 days of completion of construction of a new facility or when existing facilities are modified or when a non-Federal facility is included in a Federally supervised unit agreement or communitization agreement
- Clearly identify the lease to which it applies and the location of the facility covered by quarter section, section, township, and range or by a legal land description, with co-located facilities being identified by each lease and its facilities
- Clearly identify the site security plan covering the facility.

Violation:	Minor.
Corrective Action:	Prepare and/or furnish a complete and accurate facility diagram.
Normal Abatement Period:	10 business days after notice.

[54 39529, Sept. 27, 1989]

IV. Federal Seals

Federal seals are placed on any appropriate valve, sealing device, or LACT component not in compliance with the minimum standards contained in Part III, Requirements, sections A and B, whenever the operator is not present at the site to abate the noncompliance upon its discovery by the authorized officer, or refuses or is unable to abate the noncompliance. The position of the valve or component is not changed. The placement of a Federal seal on any valve, sealing device, or component does not constitute compliance with the minimum standards. The operator is required to take the action specified in the Notice of Incident of Noncompliance or written order of the authorized officer within the time allowed for abatement in order to meet the compliance requirement. The Notice of Incident of Noncompliance or written order includes a notice of the

placement of the Federal seal. A card is attached to each Federal seal installed. identifying the Federal seal as such and advising that removal or violation of the seal without approval by the authorized officer shall result in an immediate assessment of $250. The name and telephone number of the authorized officer are shown on the card.

V. Variances from Minimum Standards

An operator may request the authorized officer to approve a variance from any of the minimum standards prescribed in section III hereof. All such requests shall be submitted in writing to the appropriate authorized officer and provide information as to the circumstances which warrant approval of the variances requested and the proposed alternative methods by which the related minimum standards are to be satisfied. The authorized officer, after considering all relevant factors, if appropriate, may approve the requested variance(s) if it is determined that the proposed alternative(s) meet or exceed the objectives of the applicable minimum standard(s).

ATTACHMENTS

I. DIAGRAMS

Site Facility Diagrams and Sealing of Valve

Introduction – 1 & 2
Equipment and Valve Symbols – 3
Line Symbols and Valve Identification – 4

Diagrams	Identification	Sales Mode	
I-A.....	Lease Number NM – 1234	Tank Gauge	5 & 6
I-B.....	Lease Number NM – 1234	LACT	7 & 8
I-C.....	Able Shallow Unit	Tank Gauge	9 & 10
I-D.....	Able Shallow Unit.....	LACT	11 & 12
I-E.....	Lease Numbers W – 2345 & W – 6789	Tank Gauge	13 - 15
I-F.....	Lease Number C – 1357	LACT and Tank Gauge	16 & 17
I-G.....	Lease Number M – 2468	LACT	18 & 19
I-H.....	Able Sand Unit	Tank Gauge and Gauge Transfer	20 & 21
I-I.....	Able Sand Unit	LACT & LACT Transfer	22 & 23

Site Facility Diagrams and Sealing of Valves

Introduction

Attachment I is provided not as a requirement but solely as an example, both to aid operators in determining what valves are considered to be "appropriate valves" subject to the seal requirements, and to aid in the preparation of facility diagrams. In making the determination of what is an "appropriate valve," the entire facility must be considered as a whole, including the size of the facility, the type of equipment, and the on-going activities at the facility. It is impossible to cover every type of situation that exists or could exist in conducting production activities. The following diagrams are intended to be representative of the sealing requirements in this Order.

Equipment and Valve Symbols

Item

Header – HD

Free water knock – FWKO

Line heater – LH; Steam generation facility – SGF

Separator – S

Heater Treater – HT

Gun barrel or wash tank – GB

Storage tank – ST

Tank: Water – W/T; Slop oil – SO/T; Surge – ST/T

Tanks: Fuel oil – FO/T; power oil – PO/T

Pit: munber of pits – (1)

Valve

Automated custody transfer unit – LACT

Gas meter run – GM

Connection: Pipeline – PL; Truck loading – TL

Pump: Circulating – CP; Transfer – TP

Check valve – CK

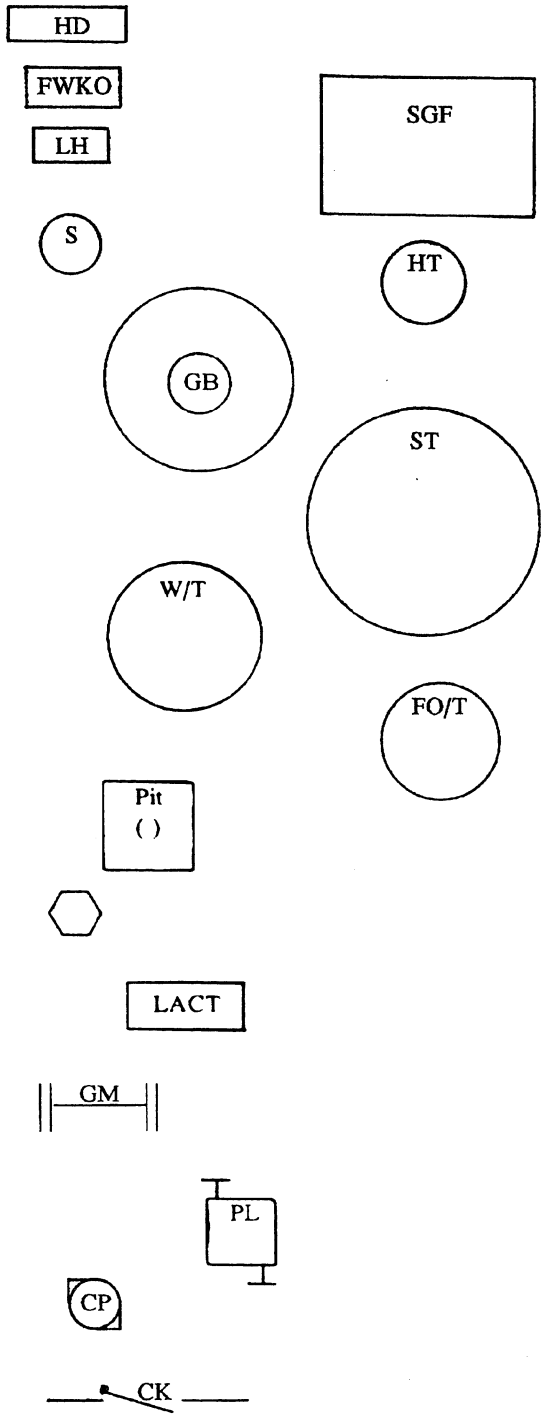

Line Symbols and Valve Identification

Item	Line Symbol	Valve ID
Direction of flow	→	
Fill line	—— F ——	F
Test line	—— T ——	T
Equalizer/overflow line	—<⬡>—	E
Sales line	—— S ——	S
Circulating lines: tank – C; pit – PC	—— C/PC ——	C
Drain line: tank – D; production vessel – PD	—— D/PD ——	D, PD
Tank vent line	—— V ——	V
Gas line	—— G ——	G
Water line	—— W ——	W
Bad oil line (LACT)	—— B ——	B
Safety valve vent line	—— SV ——	SV
Miscellaneous access line: royalty oil; lease use	—— M ——	M
Heating lines: contents – O; other media – H	—— O/H ——	O,H
Fuel line – U; power oil line – PO	—— U ——	U,P
Water disposal line	—— WD ——	WD
Lines: not connected	—┼—	
connected	—┴—	
Portable well tester outlets		PT
Gas roll line	—— R ——	

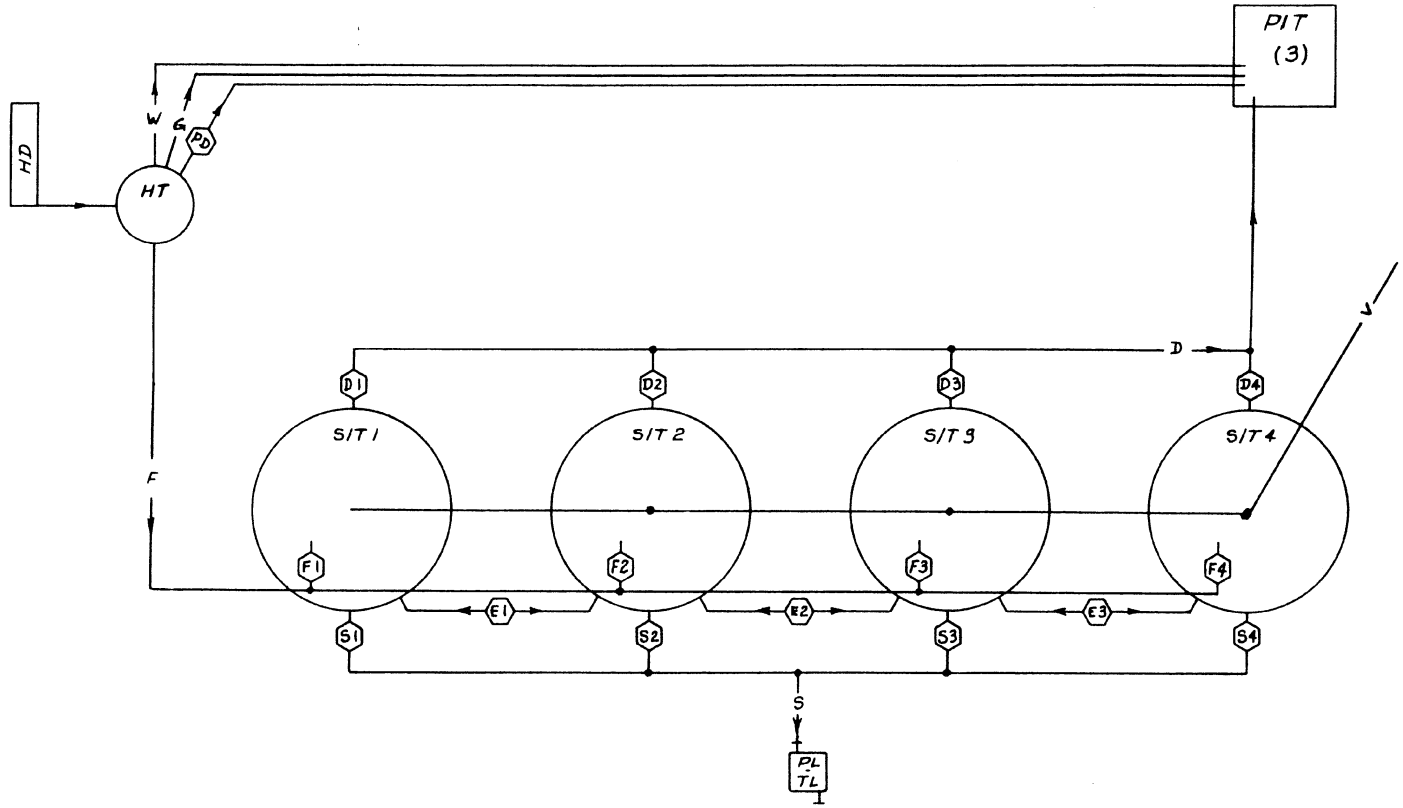

Able Oil Company
Lease: Federal - NM1234
Location: NE/4 NW/4 Sec. 4, T. 28 N., R. 13 W.

This lease is subject to the site security plan for NORTHWEST NEW MEXICO OPERATIONS. The plan is located at: Able Oil Company
212 Federal Blvd.
Farmington, NM

Diagram I-A

Attachment 1-5

Attachment 1-6

Attachment to the Site Facility Diagram – Lease NM 1234

General sealing of valves, sales by tank gauging.

Production phase. All drain valves, D1 thru D4, and all sales valves, S1 thru S4, sealed closed.

Sales phase. The tank from which sales are being made will be isolated by sealing closed the drain valve, fill valve. and the equalizer valve(s) during sales.

Draining phase. The tank being drained will be isolated by sealing closed the sales valve. fill valve, equalizer valve(s), and the drain valves on the other tanks.

Example:

On going activity. Production going into tank S/T1, tank bottoms are being drained from tank S/T3, and sales are being made from tank S/T4.

Sealing of valves.

Tank S/T1 – Valves S1 and D1 sealed closed.
Tank S/T2 – Valves ***S/2*** and D2 sealed closed.
Tank S/T3 – Valves S3, E2, and F3 sealed closed.
Tank S/T4 – Valves E3, F4, and D4 sealed closed.

Note: *S/2* should be amended to read S2.

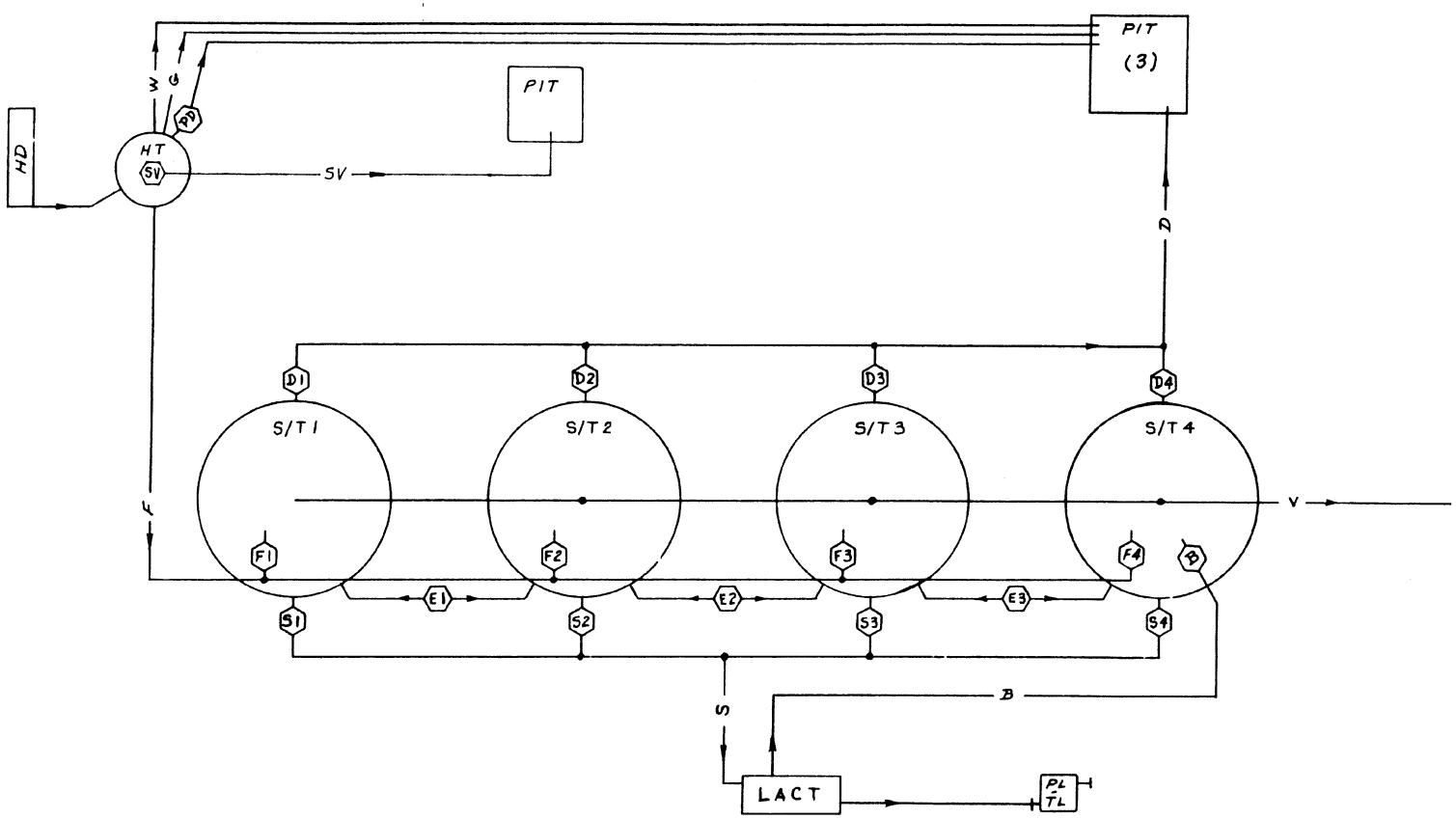

Able Oil Company
Lease: Federal - NM 1234
Location: NE/4 NW/4 Sec. 4,
T. 28 N., R. 13 W.

This lease is subject to the site security plan for NORTHWEST NEW MEXICO OPERATIONS. The plan is located at:

Able Oil Company
212 Federal Bld.
Farmington, NM

Diagram I-B

Attachment 1-7

Attachment to the Site Facility Diagram-Lease NM 1234

General sealing of valves, sales by LACT.

Production phase. All drain valves D1 thru D4 sealed closed.
Sales phase. All drain valves D1 thru D4 sealed closed.
Draining activity. The tank being drained will be isolated by sealing closed the sales, fill and equalize line valves, and the drain valves on the other three tanks.

Examples:
On going activity. Production is going tank S/T1, tank bottoms are being drained from tank S/T3, and sales are being made from tank S/T4.
Sealing of valves.
Tank S/T1 – Valve D1 sealed closed.
Tank S/T2 – Valve D2 sealed closed.
Tank S/T3 – Valves E2, E3, S3, and F3 sealed closed.
Tank S/T4 – Valve D4 sealed close.

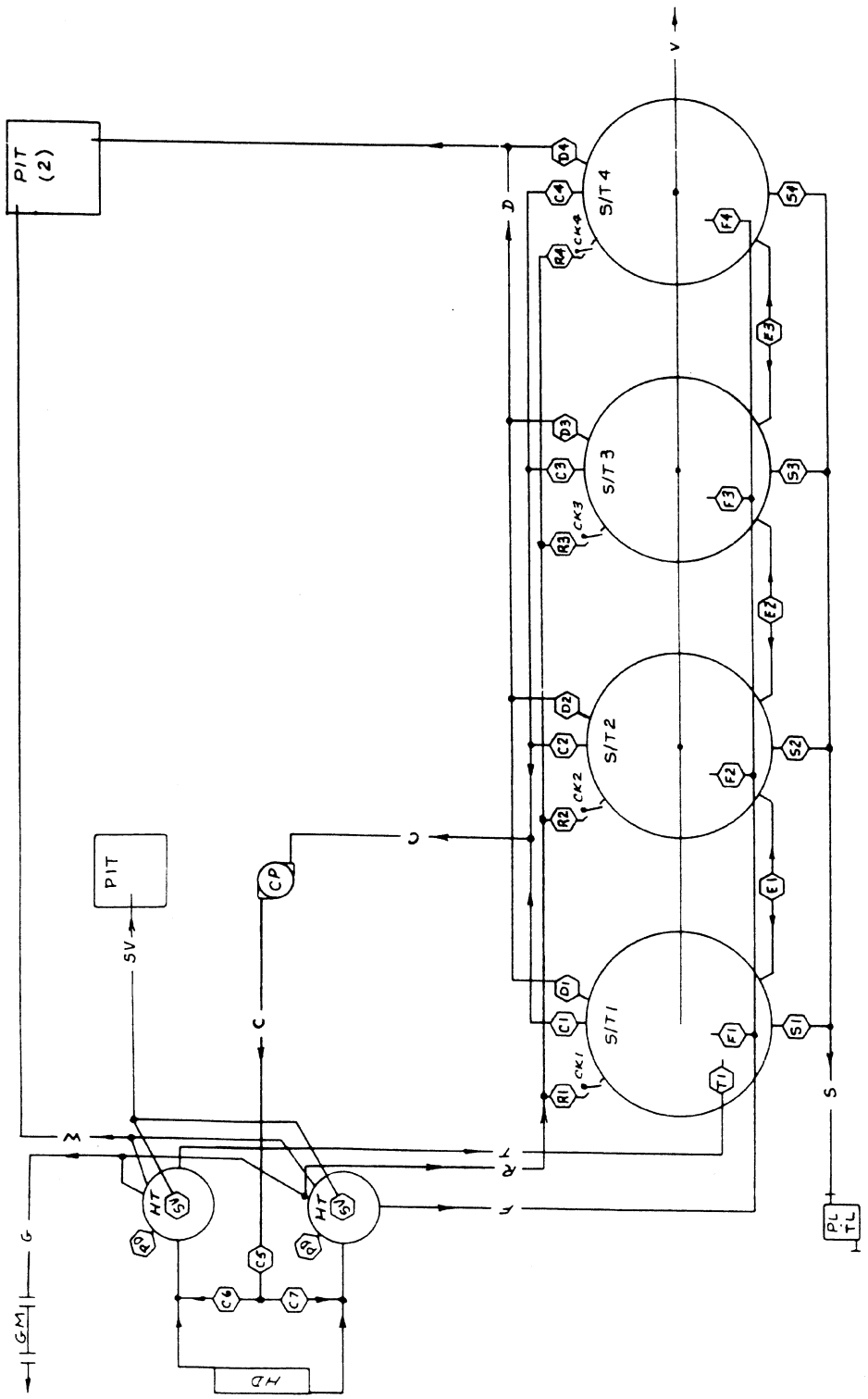

This unit is subject to the site security plan for Northwest New Mexico Operations. The plan is located at: Able Oil Company 212 Federal Blvd. Farmington, NM

Able Oil Company
Lease: Able Shallow Unit
Location: NW/4 SE/4 Sec. 25, T. 28 N., R. 13 W.

Diagram I-C

Attachment to the Site Facility Diagram – Able Shallow Unit

General sealing of valves, sales by tank gauging.

Production phase. All drain valves, D1 thru D4, and all sales valves, S1 thru S4, sealed closed.

Sales phase. The tank from which sales are being made will be isolated by sealing closed the drain valve, circulating valve, fill valve(s), and equalizer valve(s) during sales.

Draining activity. The tank drained will be isolated by sealing closed the sales valve, fill valve(s), circulating valve, equalizer valve(s) and the drain valves on the other three tanks.

Circulating activity. All drain and sales valves sealed closed.

Tank bottom roll-over activity. No seals required on the R1 thru R4 valves since check valves were used appropriately.

Example.

On going activities. One well on routine test and all other production is going into tank S/T2. Tank S/T3 bottoms are being circulated to the production heater-treater and sales are being made from tank S/T4.

Sealing of valves.

Tank S/T1 – ***Valve*** D1 and S1 sealed closed.
Tank S/T2 – ***Valve*** D2 and S2 sealed closed.
Tank S/T3 – Valves D3 and S3 sealed closed.
Tank S/T4 – ***Valve*** E3, F4, D4, and C4 sealed closed.

No seals required on valves R1 thru R4.

Note: ***Valve*** should be amended to read Valves.

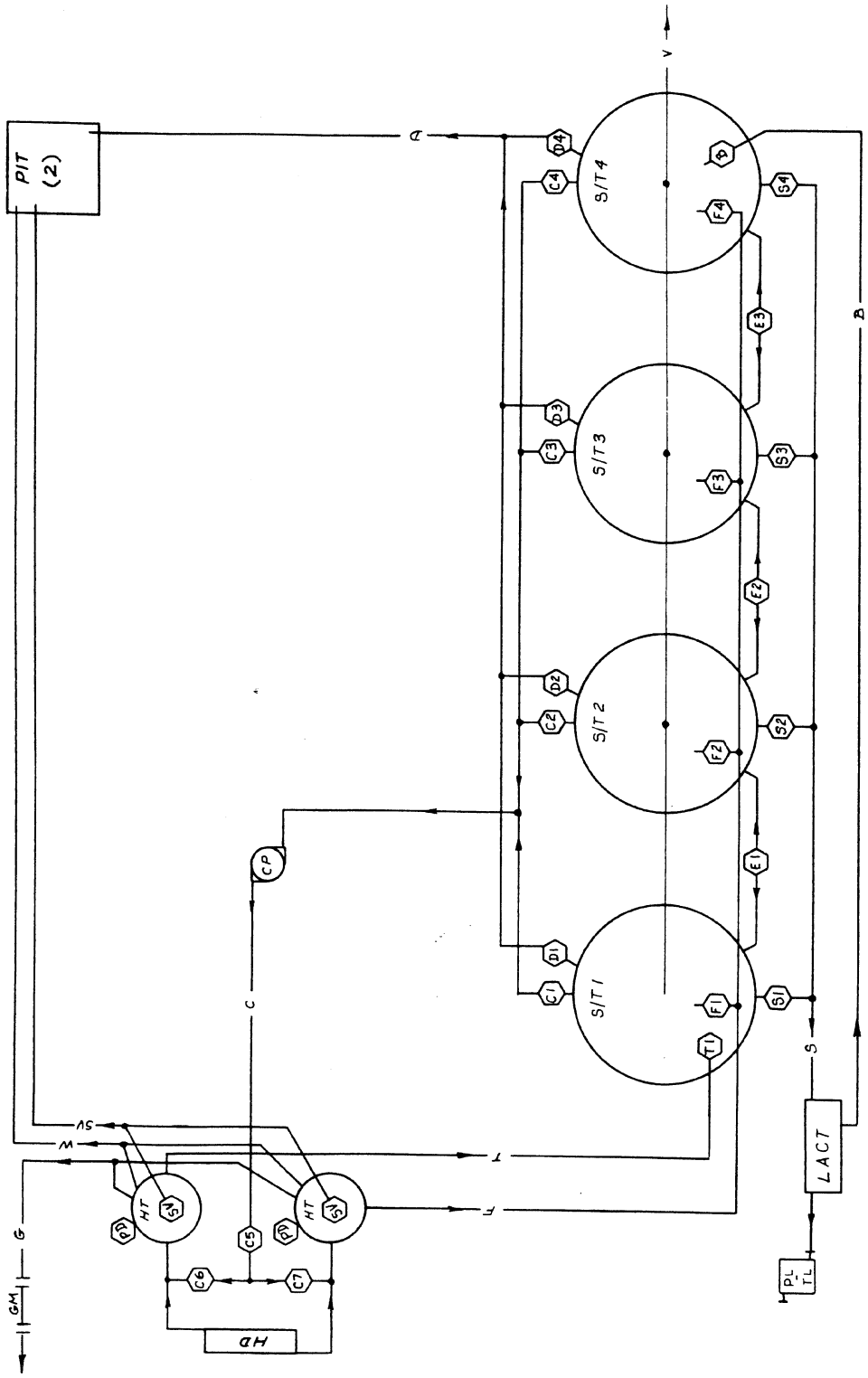

This Unit is subject to the site security plan for NORTHWEST NEW MEXICO OPERATIONS. The plan is located at: Able Oil Company 212 Federal Blvd. Farmington, NM

Able Oil Company
Lease: Able Shallow Unit
Location: NW/4 SE/4 Sec. 25, T. 28 N., R. 13 W.

Diagram I-D

Attachment to the Site Facility Diagram – Able Shallow Unit

General sealing of valve, sa!es by LACT.

Production phase. All drain valves D1 thru D4 sealed closed.
Sales phase. All drain valves D1 thru D4 sealed closed.
Draining activity. The tank being drained will be isolated by sealing closed the sales valve, fill valve(s) circulating valve, equalizer valve(s), and the drain valves on the other three tanks.
Circulating activity. All drain valves sealed closed.

Example:
On going activities. One well on routine test and all other production is going into tank S/T2. Tank S/T3 is being circulated to the production treater and sale are being made from tank S/T4.
Sealing of valves.
Tank S/T1 – Valve D1 sealed closed.
Tank S/T2 – Valve D2 sealed closed.
Tank S/T3 – Valve D3 sealed closed.
Tank S/T4 – Valve D4 sealed closed.

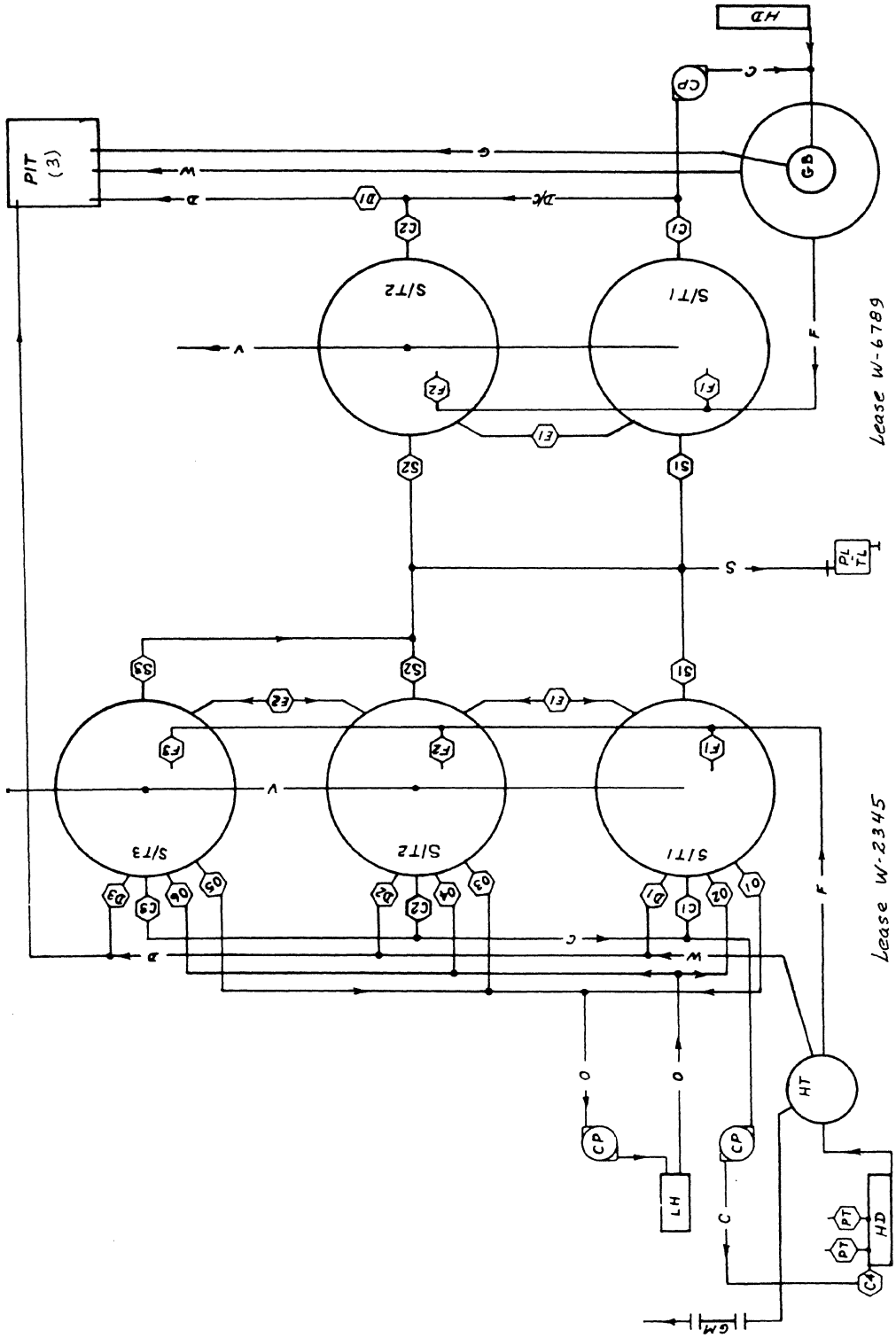

Both leases are subject to the site security plan for Southwest Wyoming Operations.
The plan is located at: Able Oil Company
25 Front Street
La Barge, WY

Able Oil Company - Common storage facility.
Location: NW/4 SW/4 Sec. 20, T. 27N., R. 113W.

Diagram I-E

Attachment 1-14

Common Storage Facility

Attachment to the Site Facility Diagram – Lease W 2345

General sealing of valves, sales by tank gauging.

Production Phase. All valves D1 thru D3 and S1 thru S3 sealed closed.
Sales phase. The tank from which sales are being made will be isolated by sealing closed all lines entering or leaving the tank, i.e., fill valve, equalizer valve(s), circulating valve, drain valve. and the inlet and outlet valves on the heating lines.
Drain activity. The tank being drained will be isolated by sealing closed its fill ***valves***, sales valve, circulating valve, equalizer valve(s). and the inlet and outlet valves on the heating lines. The drain valves on the other two tanks will be sealed closed.
Circulating activity. Valves D1 thru D3 and S1 thru S3 sealed closed. Both PT valves sealed closed, as well as any other valves on the header which would provide access to the production being circulated.
Example:
*On going activity (1).*Sales are being made from tank S/T1, production is going into tank S/T3, and bottoms are being drained from tank S/T2.
Sealing of valves.
Tank S/T1 – Valves F1, 01, 02. C1, E1. and D1 sealed closed. ,
Tank S/T2 – Valves F2, 03, 04, C2 E2, and S2 sealed closed.
Tank S/T3 – Valves S3 and D3 sea closed.
On going activity (2). Sales have been completed at tank S/T1 and draining activities have been completed at tank S/T2. Valves S1 and D2 have been sealed closed. Production is diverted to tank S/T1, tank S/T2 is in a sales mode. and tan S/T3 Is being circulated.
Sealing of valves.
Tank S/T1 – Valves D1 and S1 sealed closed.
Tank S/T2 – Valves F2, 03, 04, C2, D2, El, and E2 sealed closed.
Tank S/T3 – Valves D3 and S3 sealed closed. Both PT valves sealed closed.

Attachment 1-15

Attachment to the Site Facility Diagram – Lease W 6789

General sealing of valves, sales by tank gauging.

Production phase. Valves S1, S2, C1 and C2 sealed closed.
Sales phase. The tank from which sales are being made will be isolated by sealing closed the fill, equalizer, circulating/drain valve.
Draining activity. The tank being drained will be isolated by sealing closed its fill valve, equalizer valve, and sales valve. Additionally, the circulating/drain valve on the other tank will be sealed closed.
Circulating activity. Valves S1, S2. D1. and the C valve on the other tank sealed closed.

Example:
On going activity (1). Production is going into tank S/T1 and tank S/T2 is being circulated to the gunbarrel.
Sealing of valves.
Tank S/T1 – Valves S1 and C1 sealed closed.
Tank S/T2 – Valves S2. and D1 must be sealed closed.
On going activity (2). Production is going into tank S/T2 and sales are on going from tank S/T1.
Sealing of valves.
Tank S/T1 – Valves F1, E1, and C1 sealed closed.
Tanks S/T2 – Valves S2 and C2 sealed closed
On going activity (3). Production is going into tank S/T1 and bottoms are being drained from tank S/T2.
Sealing of valves.
Tank S/T1 – Valves S1 and C1 sealed closed.
Tank S/T2 - Valves S2, E1, and F2 sealed closed.

Note: ***valves*** should be amended to read valve (1-14).

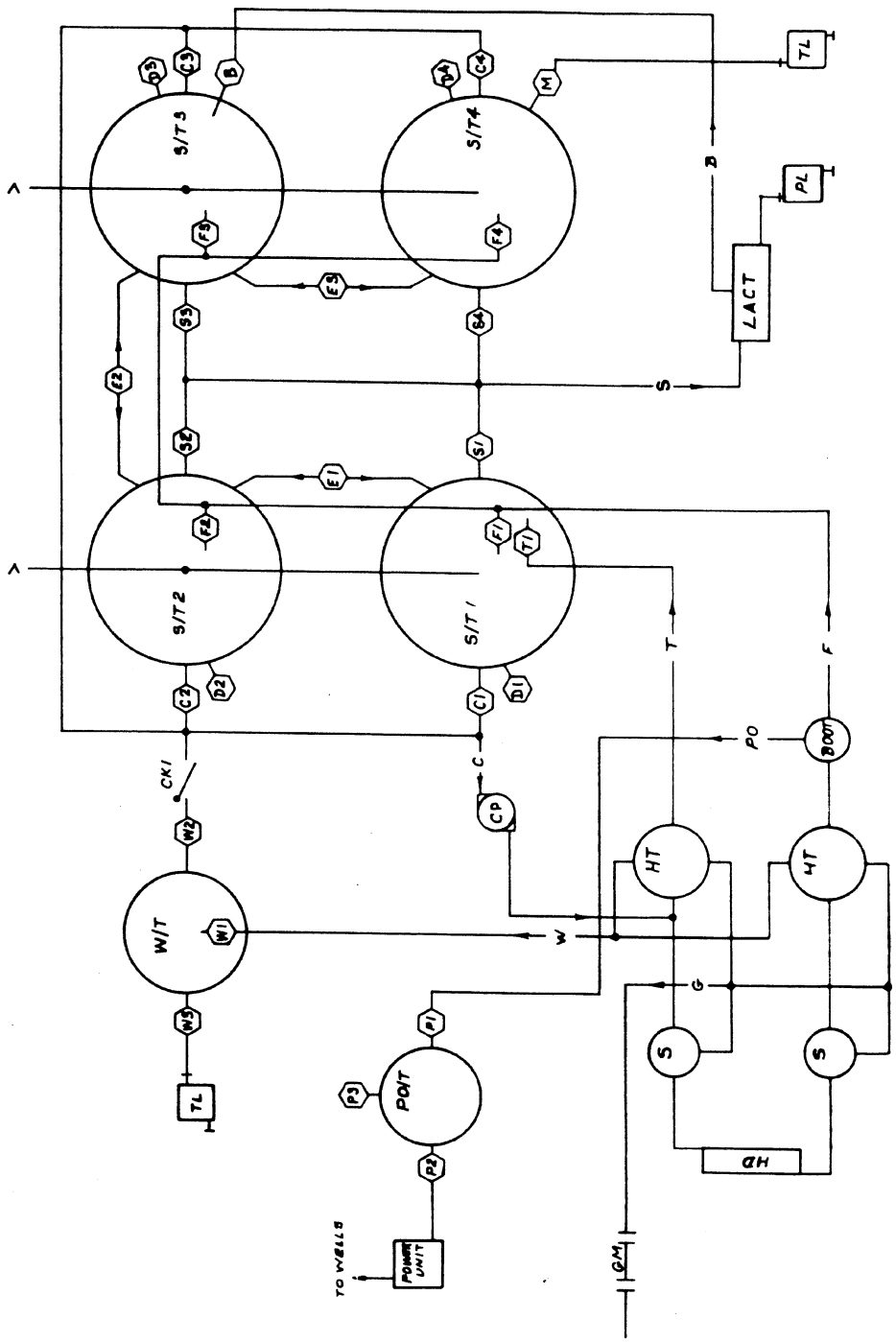

This plan is subject to the site security plan for the Coal Oil field. The plan is located at: Able Oil Company
100 First Street
Durango, CO

Able Oil Company
Lease: Federal C-1357
Location: Center NE/4 Sec. 17,
T. 32 N., R. 13 W.

Diagram I-F

Attachment to the Site Facility Diagram – Lease C 1357

General sealing of valves, sales by LACT and tank gauging.

Production phase. Valves D1 thru D4 and M sealed closed.
Sales phase (LACT). Valves D1 thru D4 and M sealed closed.
Withdrawal thru Valve M. Valves S4, F4, E3, D4 and C4 sealed closed.
Circulating activity. Valves D1 thru D4 and M sealed closed.
For all of the above activities valve P3 on tank PO/T will be sealed closed.

Example:
Ongoing activity (1). Production is going into tank S/T3, oil is being removed from tank S/T4 thru valve M. sales are being made from tank S/T1, tank S/T2 is being circulated. and bottoms are being drawn off from tank PO/T.
Sealing of valves.
Tank S/T1 – Valve D1 sealed closed.
Tank S/T2 – Valve D2 sealed closed.
Tank S/T3 – Valve D3 sealed closed.
Tank S/T4 – Valves S4, F4, D4, C4, and E3 sealed closed.
Tank PO/T – Valve P1 sealed closed.
On going activity (2). Production is going into tank S/T2, tank S/T3 is being circulated, and sales are being made from tank S/T4. Hydraulic lift operations has been resumed.
Sealing of valves.
Tank S/T1 – Valve D1 sealed closed.
Tank S/T2 – Valve D2 sealed closed.
Tank S/T3 – Valve D3 sealed closed.
Tank S/T4 – Valves D4 and M sealed closed.
Tank PO/T - Valve P3 sealed closed.

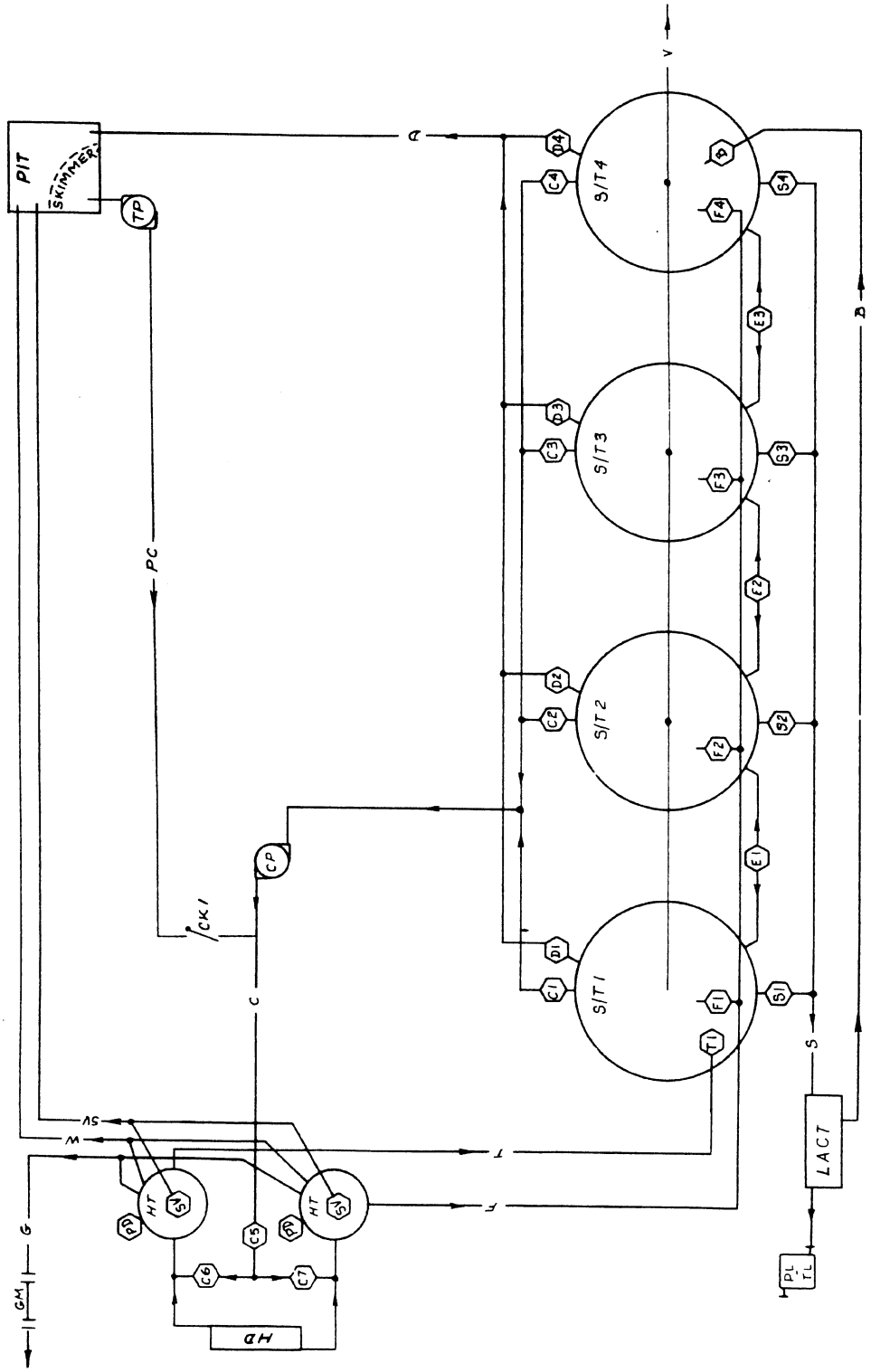

This lease is subject to the site security plan for the CS oil Field. Theplan is located at: Able Oil Company 713 Center Street Cutbank, MT

Able Oil Company
Lease: Federal M-2468
Location: SE/4 SE/4 Sec. 7, T. 35N., R. 5W.

Diagram I-G

Attachment to the Site Facility Diagram – Lease M 2468

General sealing of valves, sales by LACT.

Production phase. Valves D1 thru D4 sealed closed.
Sales phase. Valves D1 thru D4 sealed closed.
Draining Activity. The tank being drained will be isolated by sealing closed the sales valve, fill valve(s), circulating valve, equalizer valve(s), and the drain valves on the other three tanks.
Circulating activity. All drain valves sealed closed.

Example:
On going activity. Production is going into tank S/T1, tank S/T2 is being drained, sales are being made from tank S/T3, and tank S/T4 is being circulated to the test treater. Pit skimming activity being conducted.
Sealing of valves.
Tank S/T1 – Valve D1 sealed closed.
Tank S/T2 – Valves E1, E2, S2, F2, and C2 sealed closed.
Tank S/T3 – Valve D3 sealed closed
Tank S/T4 – Valve D4 sealed closed.

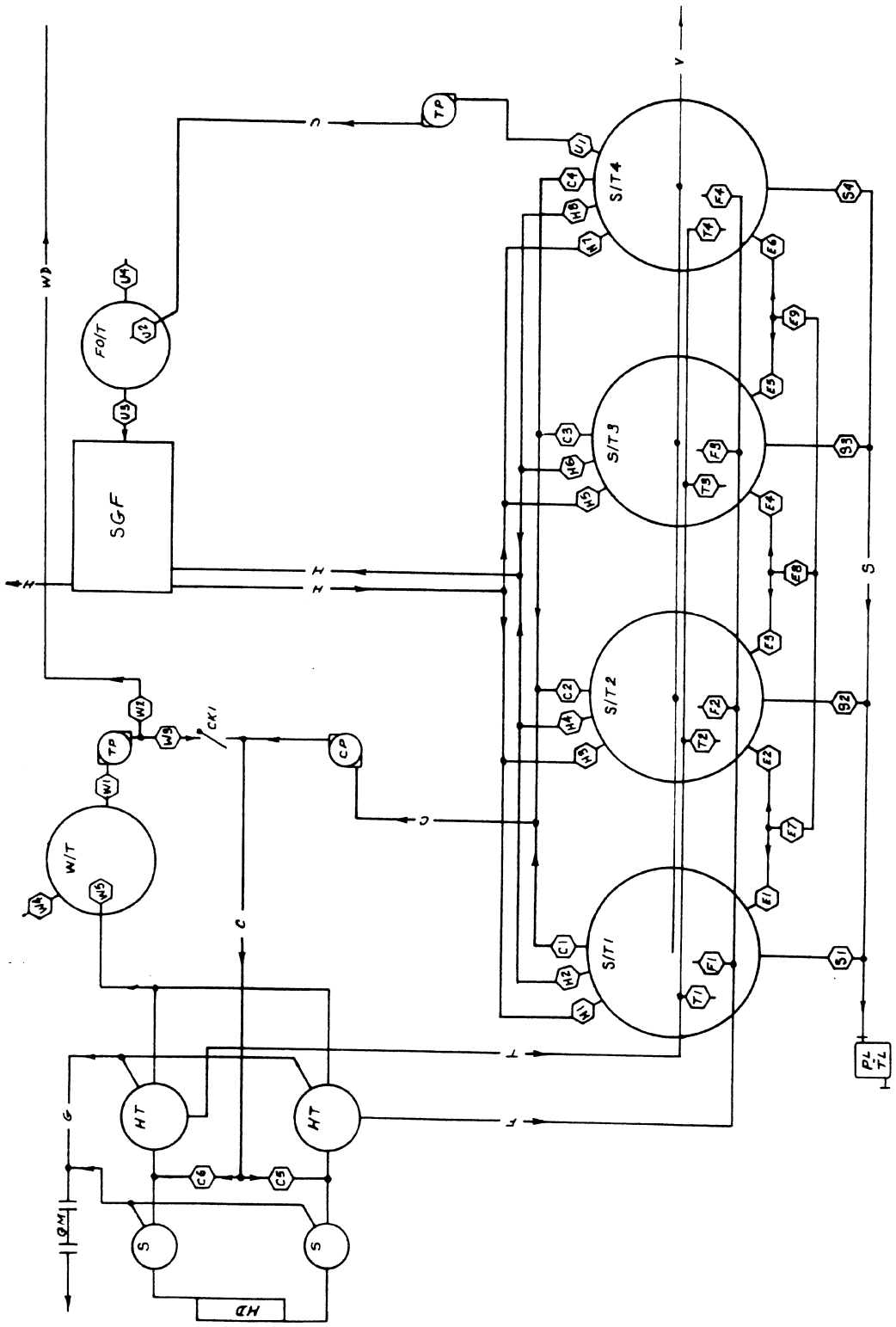

This unit is subject to the site security plan for the Able Sand Unit. The plan is located at: Able Oil Company 1700 12th Ave. Bakersfield, CA

Able Oil Company
Lease: Able Sand Unit
Location: NW/4 NE/4 Sec. 12, T.16 S., R.20 E.

Diagram I-H

Attachment to the Site Facility Diagram – Able Sand Unit

General sealing of valves, sales by tank gauging.

Production phase. Valves S1 thru S4 and U1 and U4 sealed closed.
Sales phase. The tank from which sales would be made would be completely isolated by sealing the fill, test equalizer(s), and circulating valves, and if appropriate, valve U1. All other sales valves sealed closed.
Circulating activity. Valves S1 thru S4 and U1 and U4 sealed closed.
Fuel oil delivery. Valves U4, C4, T4, F4, E6 and S1 thru S4 sealed closed.

Example:
On going activity. Production is going into tank S/T1, a well is being tested into tank S/T2, sales are being made from tank S/T3, and fuel oil is being delivered from tank S/T4.
Sealing of valves.
Tank S/T1 – Valve S1 sealed closed.
Tank S/T2 – Valve S2 sealed closed.
Tank S/T3 – Valves E4, E5, T3, F3 and C3 sealed closed.
Tank S/T4 – Valves E6, S4, T4, F4, and C4 sealed closed.
Tank FO/T – Valve U4 sealed closed.

Attachment 1-22

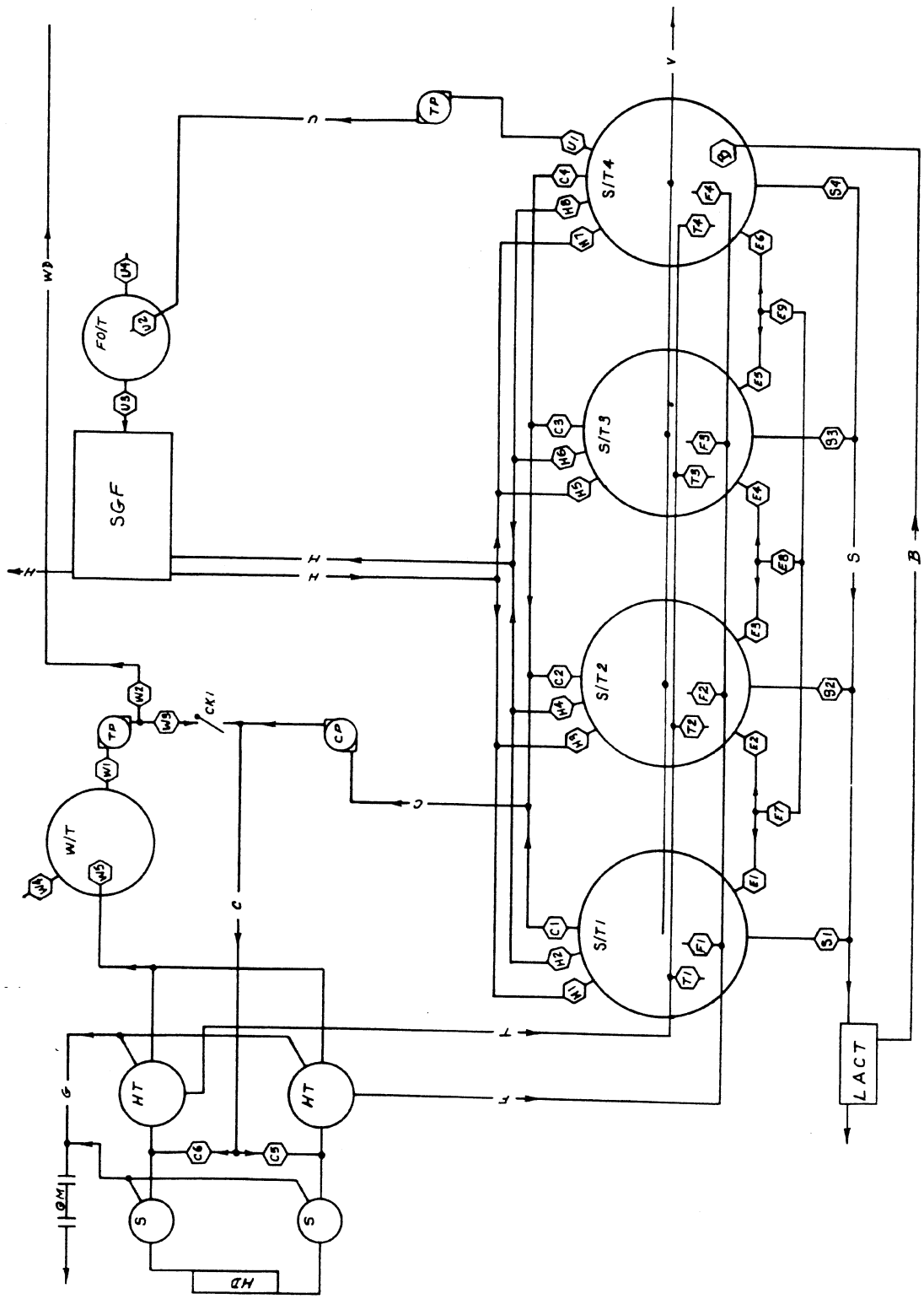

This unit is subject to the Site security plan for the Able Sand Unit. The plan is located at: Able Oil Company 1700 12th Ave. Bakersfield, CA.

Able Oil Company
Lease: Able Sand Unit
Location: NW/4 NE/4 Sec. 12
T. 16 S., R. 20 E.

Diagram I-I

Attachment to the Site Facility Diagram – Able Sand Unit

General sealing of valves, sales and transfer by LACT.

Production phase. Valve U4 sealed closed.
Sales phase. Valve U4 sealed closed.
Circulating activity. Valve U4 sealed closed.
Fuel delivery to FO/T. Valve U4 sealed closed.
Circulate tank WIT. Valve U4 sealed closed.

Since the fuel oil contained in tank FO/T is used on the lease and such use is royalty free, the tank must be sealed to prevent removal of crude oil for the use other than it was intended.

No other valves require sealing for any phase or activity.