UNITED STATES DEPARTMENT OF THE INTERIOR
BUREAU OF LAND MANAGEMENT
WASHINGTON, D.C. 20240

In Reply Refer To:
3162.7 (612)
May 11, 1990

Instruction Memorandum No. 90-474
Expires: 9/30/91

To: All State Directors

From: Director

Subject: The Bureau's Oil and Gas Production Accounting Responsibilities

Background/Issue:

The Bureau of Land Management's (BLM) responsibility for assuring a proper and correct accounting of the oil, gas, and water produced from onshore jurisdictional leases has not been delineated clearly in the past. As a result, confusion exists as to the exact division between the regulatory responsibilities of BLM and those of the Minerals Management Service (MMS). This confusion emanates primarily from the fact that the terms sales point, custody transfer point, royalty valuation point, royalty determination point, and royalty settlement point are often used interchangeably. In fact, such terms may or may not refer to a common point. Thus, the purpose of this memorandum is to define that "point" beyond which BLM's responsibility ceases for the proper accounting of the oil and gas produced from jurisdictional leases.

Policy

The BLM's responsibilities are to ensure that (1) reported monthly production volumes of oil, gas, and water accurately reflect the actual volumes produced during the month on a lease, communitized tract, or unit participating area basis, whichever is appropriate, and (2) the procedures used to measure production are performed to established standards, including the proper and timely calibration of meters used in that regard.

Methods of Accomplishment:

The oil and gas operating regulations at 43 CFR 3162.7-2 (oil) and 3162.7-3 (gas) both state that production shall be measured on the lease (communitized tract, unit participating area) but that off-lease measurement may be approved by the authorized officer. Thus, the cited regulations affirm the above-stated policy that BLM's responsibility for the proper accounting of production from onshore jurisdictional leases is on the leasehold (except where off-lease measurement is approved). If production is measured more than once on the leasehold, such as for allocation purposes, BLM'S responsibility for production accounting starts from the well head and ends at the last

measurement point before the production leaves the leasehold (except where off-lease measurement is approved). However, under no circumstances does BLM's responsibility go past the inlet meter of any gas processing plant whether measured on- or off-lease. It is important to realize that the last measurement point before the production leaves the leasehold may or may not be the same as the sales point, custody transfer point, or royalty valuation point. However, because the production removed from the lease, and thus, the production upon which royalty is due, is determined at this last measurement point, it is usually synonymous with the royalty determination point or royalty settlement point.

In order to further clarify the foregoing, attached are three examples. The letter "X" has been entered on each of the attachments to indicate those points at which production is last measured before leaving the leasehold (except where off-lease measurement was approved) and, to indicate clearly the points at which BLM's responsibility for oil and gas production accounting terminates.

In summary, BLM's responsibility for the proper accounting of the oil and gas produced from jurisdictional leases ceases once the production is last measured before leaving the leasehold (except where off-lease measurement is approved) but not past an inlet meter for a gas processing plant. The determination of royalty-free use of production and the avoidability/unavoidability of loss of production also ceases at this point. Thereafter, MMS is responsible for (1) comparisons of the data reported on the Monthly Report of Operations with the sales and royalty data reported to MMS's Auditing and Financial System; (2) calculation of volumes of drip condensate, residue gas, and gas plant products attributable to the gas removed from the lease; (3) determinations of production unit values; and (4) granting of transportation and/or processing allowances. When requested, however, BLM will perform inspections relating to the handling and measurement of production downstream of the last measurement point on the leasehold in accordance with the minimum standards established by MMS.

Budget Implications:

Costs of inspections downstream from the last measurement point are to be determined on a case-by-case basis upon request by MMS.

Manual/Handbook:

These instructions will be included in the future Manual on Production Handling and Site Security.

Coordination

A draft of this instruction memorandum (IM) was reviewed by field offices, and the Minerals Management Service was consulted prior to the issuance of this IM.

Contact Person:

Sie Ling Chiang, WO 610 at FTS 653-2127, or Rudy Baier at FTS 653-2153.

Hillary A. Oden
Assistant Director, Energy and
Mineral Resources

3 Attachments
1 - Production is measured on-lease (1p)
2 - Production is measured off-lease (1 p)
3 - Production is measured within the unit (1 p)

Production is measured on-lease.

Last measurement points on the leasehold for production consists of one gas meter and one condensate tank facility, both of which are on-lease.

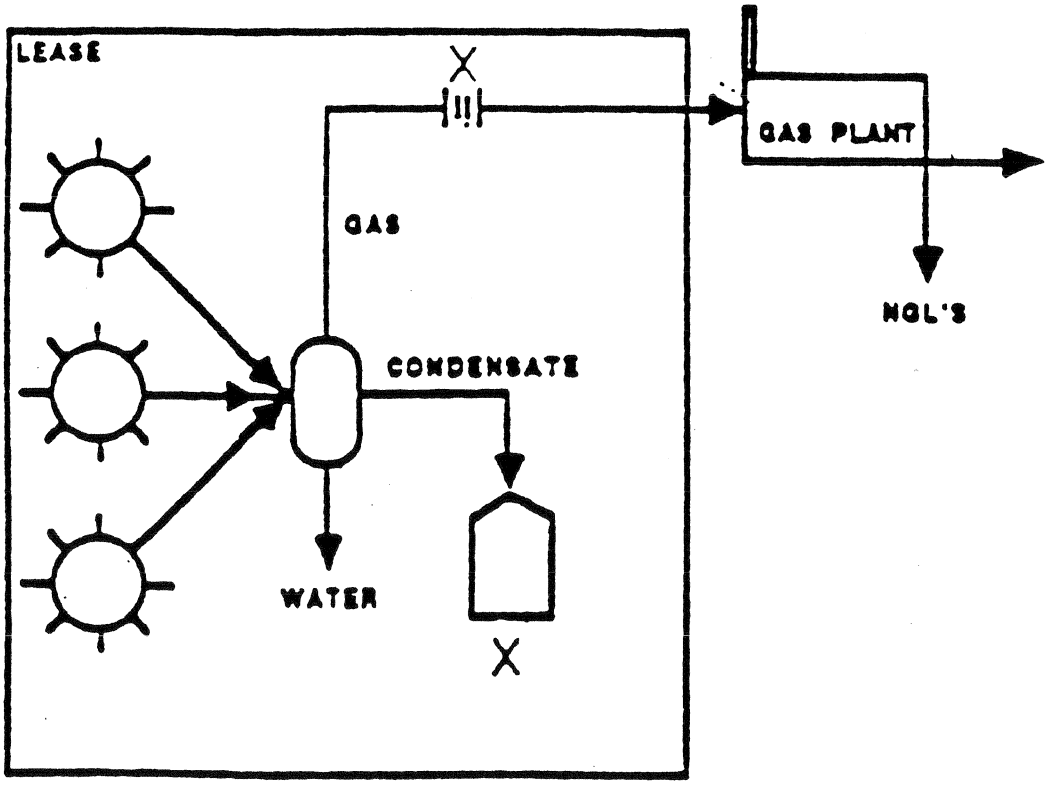

Attachment 1

Production is measured off-lease (which was approved).

Measurement points for production consist of one gas meter and one condensate tank facility, both of which are off-lease.

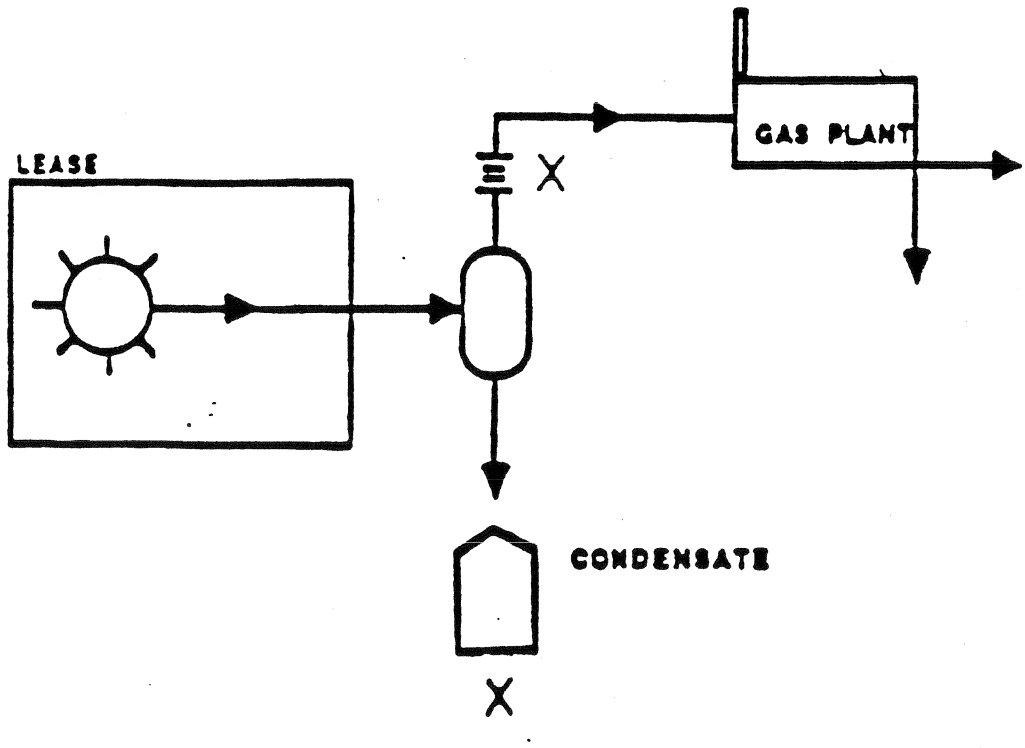

Attachment 2

Production is measured within the unit participating area.

Residue gas from the gas plant is returned to the unit for injection and production equipment fuel.

Last measurement points in the unit for production consists of two gas meters and two oil LACT meters. Also, the gas meter measuring the injected gas and the gas meter measuring the fuel used for beneficial use within the unit participating area are both under BLM responsibility.

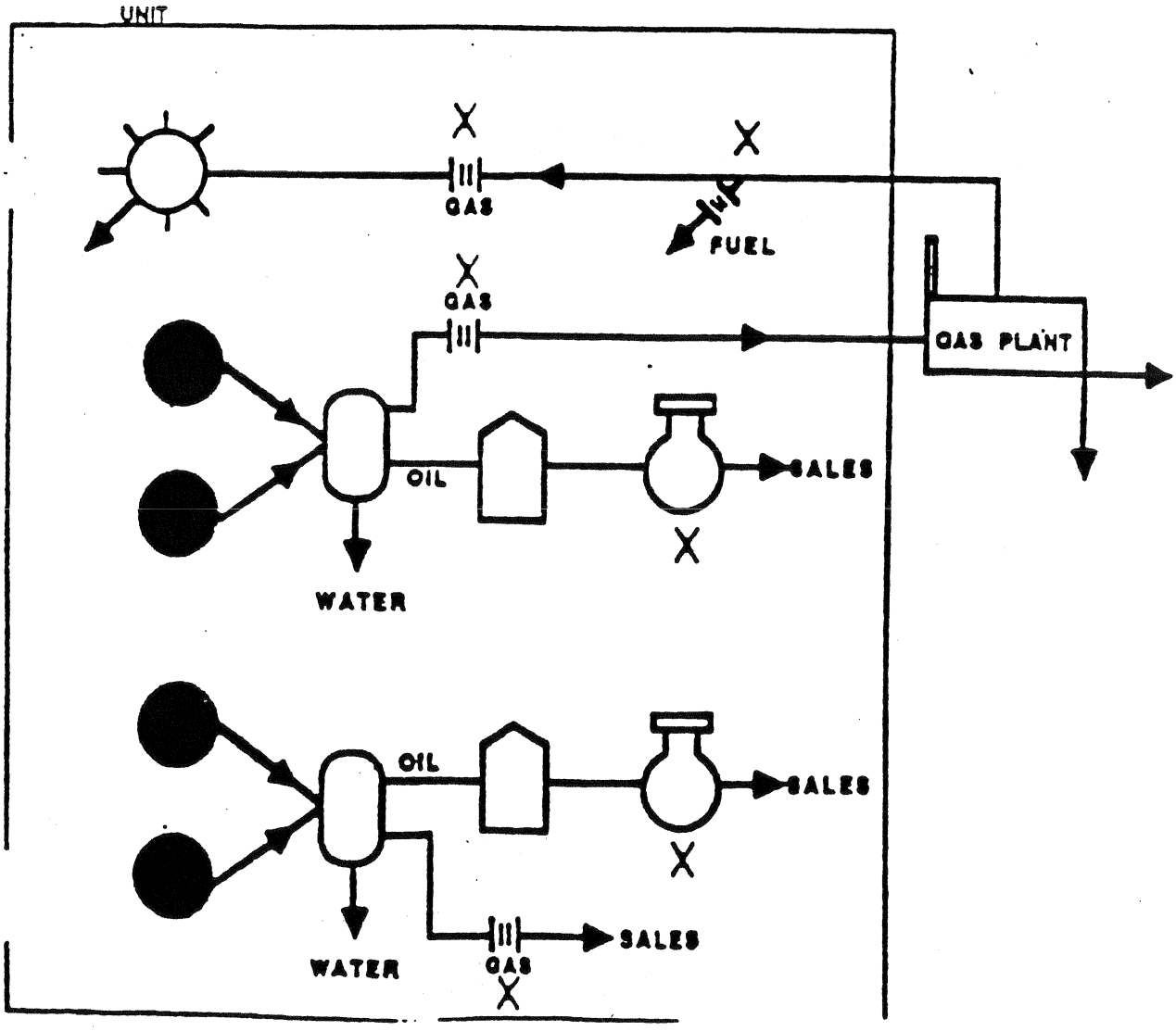

Attachment 3